PuraVida
PuraVida Wall-Mounted Single-Handle Faucet Trim
Finishes : **Chrome** Part no. : **15085001**

Description

Features

- Solid brass
- Laminar spray
- Flow: 1.5 GPM
- 16° adjustable spray
- Joystick ceramic cartridge
- Pop-up assembly not included

Required accessories

- Rough, Wall-Mounted Single-Handle Faucet (#13622USA)

Item details

List Price	$ 605.00

Technology

Eco Smart

Quick Clean

Compliance

UPC

WaterSense Meets EPA Criteria

Product image

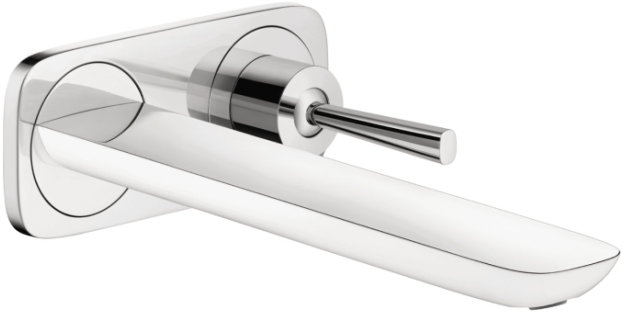
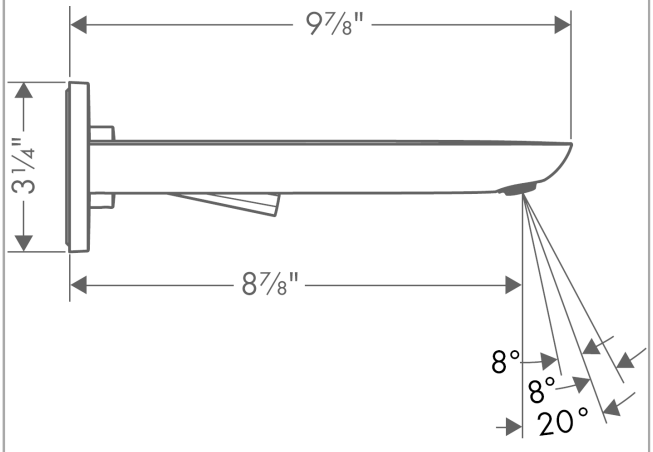
Scale drawing